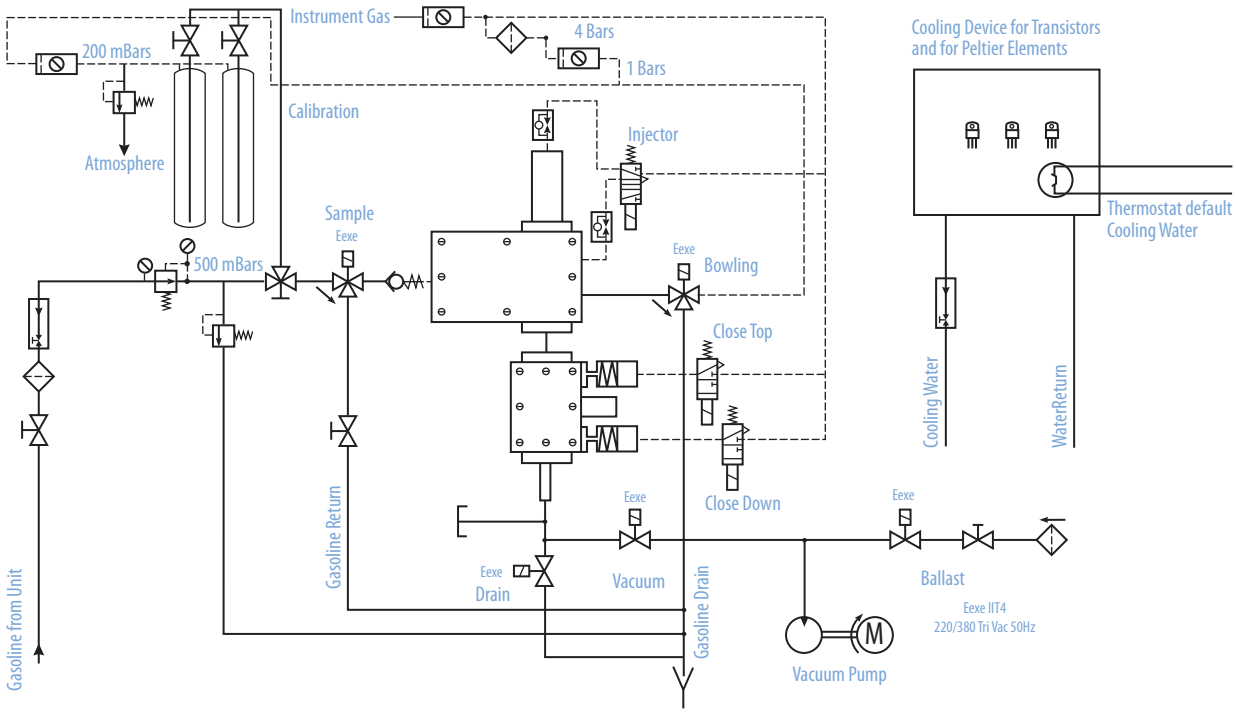
Instrument Gas
4 Bars
1 Bars
200 mBars
Atmosphere
Calibration
Injector
Cooling Device for Transistors
and for Peltier Elements
Thermostat default
Cooling Water
Sample
Eexe
500 mBars
Eexe
Bowling
Close Top
Close Down
Cooling Water
WaterReturn
Gasoline Return
Eexe
Eexe
Eexe
Drain
Vacuum
Ballast
Eexe IIT4
220/380 Tri Vac 50Hz
Gasoline Drain
Vacuum Pump
Gasoline from Unit