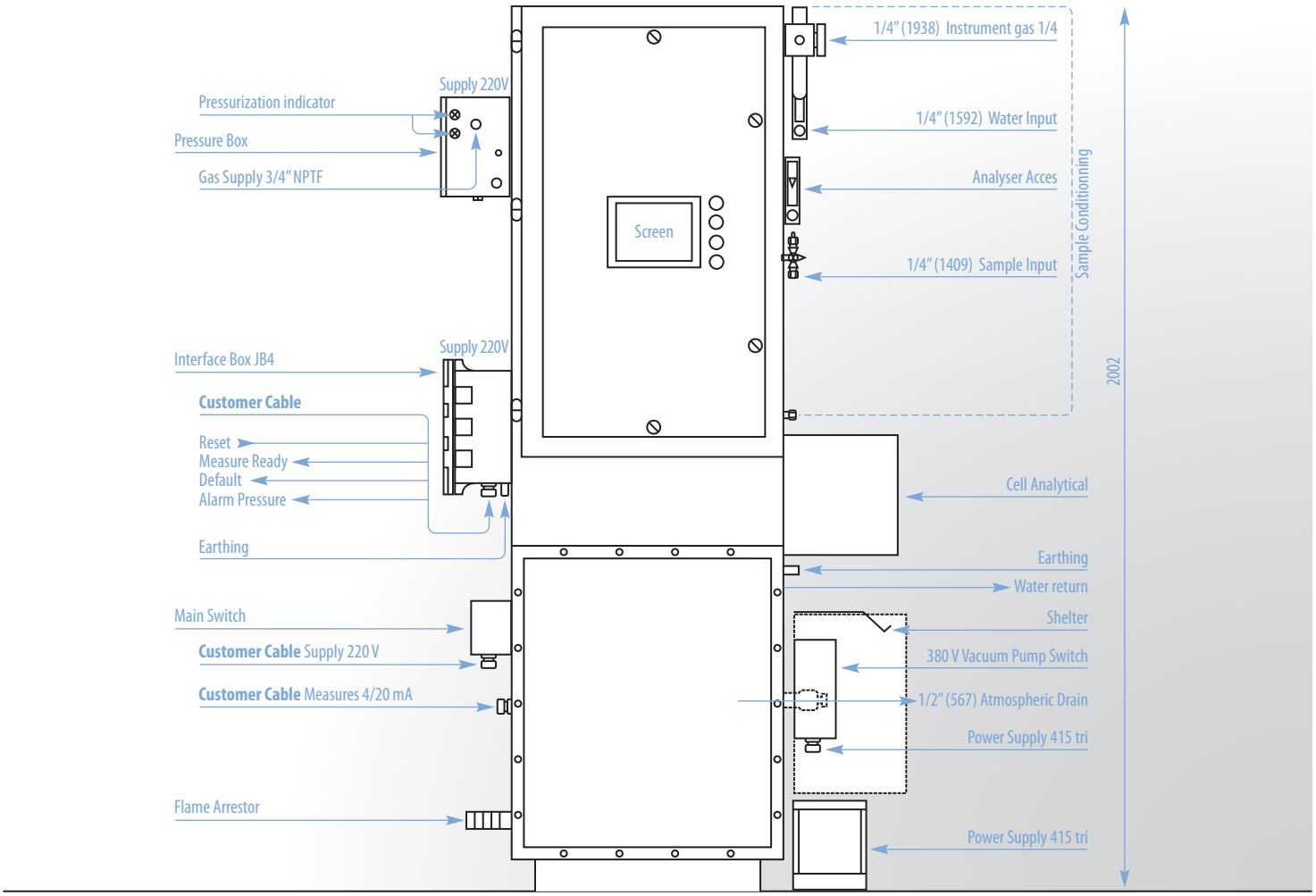
Supply 220V
Pressurization indicator
Pressure Box
Gas Supply 3/4" NPTF
Screen
1/4" (1938) Instrument gas 1/4
1/4" (1592) Water Input
Analyser Acces
1/4" (1409) Sample Input
Sample Conditionning
2002
Supply 220V
Interface Box JB4
Customer Cable
Reset
Measure Ready
Default
Alarm Pressure
Earthing
Cell Analytical
Earthing
Water return
Shelter
Main Switch
Customer Cable Supply 220 V
Customer Cable Measures 4/20 mA
380 V Vacuum Pump Switch
1/2" (567) Atmospheric Drain
Power Supply 415 tri
Flame Arrestor
Power Supply 415 tri

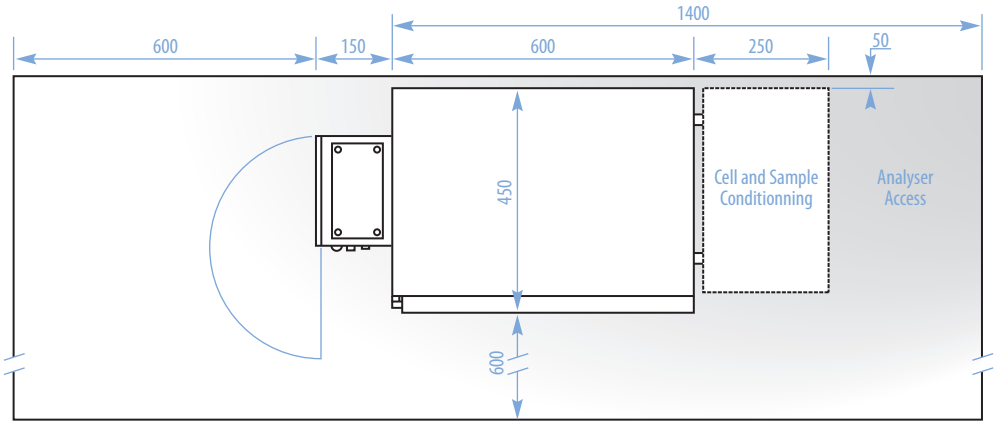
1400
600
150
600
250
50
450
Cell and Sample Conditionning
Analyser Access
600